Pneumatic Tank Level Pressure Transmitters

LT and LT/SAN Series

- Low Cost, Linear 1:1 Repeater
- ±1" WC Accuracy
- Ranges 10"WC to 100 psi
- Anti-Clogging, Corrosion Resistant
- Double-Ring Design for improved stability

The PMC Pneumatic Tank Level - Pressure Transmitters (LT Series) has been designed specifically for measuring tank levels in paper mills and similar process industries where pulp or other viscous materials are stored. The small, 1½" diameter of the transmitter permits installation to be flush with the inside wall of pipes over 3" in diameter. This flush fitting eliminates the usual pocketing problems encountered with conventional flange mounted level transmitters. The Double Ring design includes a second ring that locks the diaphragm retainer ring at the point of calibration and helps to ensure long term accuracy.

The PMC Sanitary Pneumatic Tank Level - Pressure Transmitters (LT/SAN) modifies the proven LT Series to include a Sanitary Seal at the diaphragm face. The LT/SAN was specifically designed to address the sanitary needs of the Food, Chemical, Brewery, and Pharmaceutical industries. The weld-on nipple can be mounted in most quick disconnect couplings.

The PMC Miniature Pneumatic Pressure Transmitters (PT Series) offer similar performance with packaging specifically designed to measure pressures in paper mills and similar process industries where plugging of gauges and seals is a particular concern. Please refer to the appropriate data sheet for more information.

Electronic Versions Also Available

STANDARD SPECIFICATIONS

Full Scale Ranges (Zero Based)
300"WC is standard and well suited to most applications. Other ranges from 10"WC to 100 psig also available.
Consult factory for other variations.

Accuracy
± 1" WC over Full Range

Overpressure
Up to 200 psig or Full Vacuum

Operating Temperature Range
200°F Standard, 400°F available

Construction
All Stainless Steel Construction, 316L for wetted parts

Air Consumption
2.5 Standard Cubic Feet per Hour (0.07 Nm^3/hr)

Installation
Stub 316L SS Weld-On Nipple furnished with each transmitter, Threaded Nipples also available for LT Series.

PMC adopts a continuous development program which sometimes necessitates specification changes without notice.

ORDERING INFORMATION

LT Series
Pneumatic Tank Level Pressure Transmitters

When ordering please specify the following:

MODEL PMC					
LT/DR	SS Weld-On Nipple				
LT/SAN	SS Sanitary Weld-On Nipple				
	Range	Specify psi, " WC, bar, absolute, gauge, etc.			
		O-Ring			
		N	Buna N 200°F		
		Si	Silicone 400°F		
		V	Viton 400°F		
		EPR	Ethylene Propylene 400°F		
			Diaphragm		
			Ha	Havar	
			Hc	Hastelloy C	
			Ta	Tantalum	
				Temperature	
				S	200°F
				HT	400°F
(1) Select	(2) Specify	(3) Select	(4) Select	(5) Select	

Order Code Example: PMC-LT/DR-300"WC-N-Ha-S
(1) Model: PMC-LT Tank Level Transmitter
(2) Range: 300" WC
(3) O-Ring Material: Buna N
(4) Diaphragm Material: Havar
(5) Temperature: Up to 400°F

OPTIONS

PMC offers a range of options, accessories, and variants for Tank Level - Pressure Transmitters (LT & LT/SAN) Series including the temperature and material options listed above, Stainless Steel adapters, and Calibration-Matched Pairs of Transmitters.

Contact PMC for other options and accessories

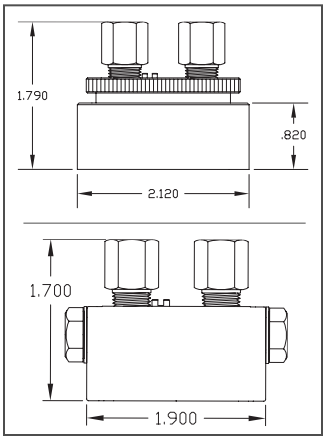

All measurements shown in inches

HEAD OFFICE

Process Measurement & Controls, Inc.
11 Old Sugar Hollow Road
Danbury, CT 06810 U.S.A.
Tel: 203-792-8686
Fax: 203-743-2051
Email: sales@pmc1.com
www.pmc1.com

Represented By: